REVISIONS				
ECN	REV.	DESCRIPTION	DATE	APPROVED

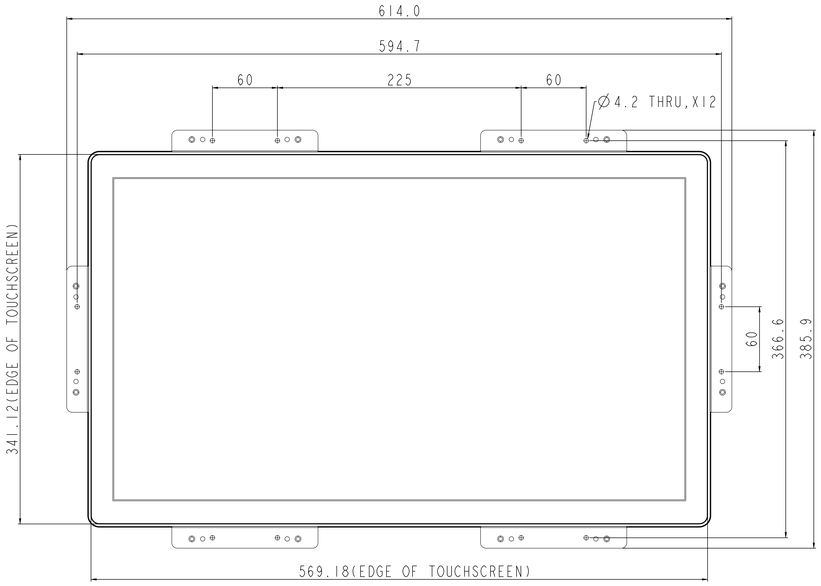

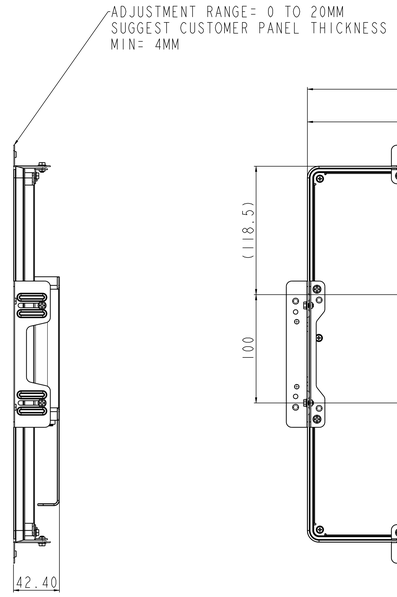

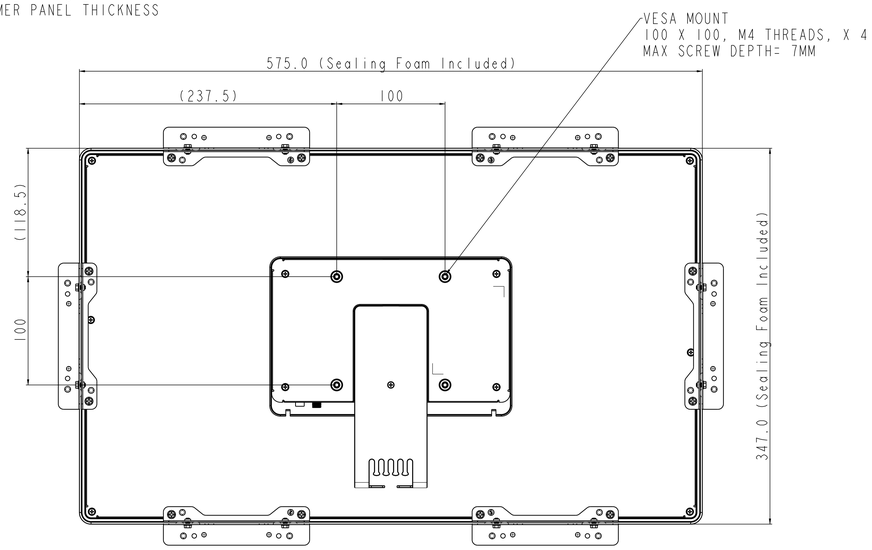

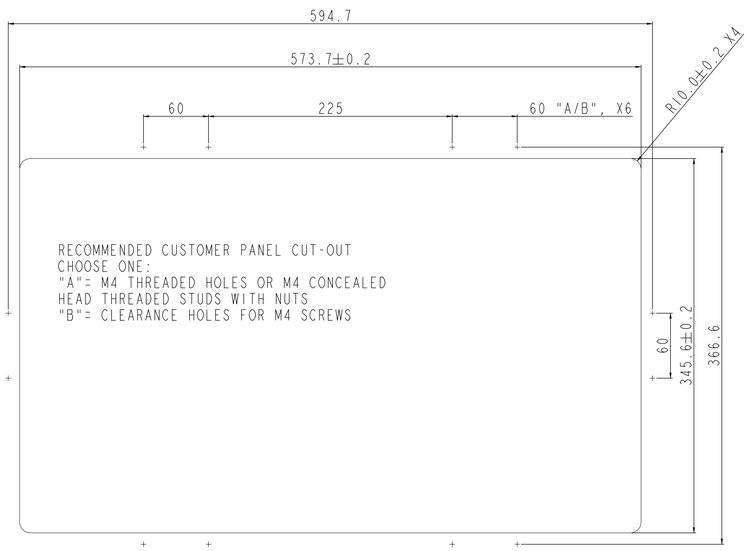

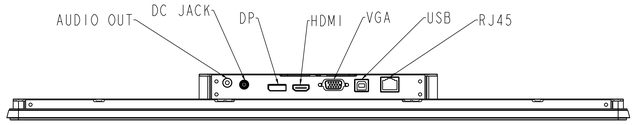

ITEM	NEXT ASSY	USED ON

APPLICATION

THIRD ANGLE PROJECTION

UNLESS OTHERWISE SPECIFIED DIMENSIONS ARE IN mm
TOLERANCES
INCHES DECIMALS .XX ± .XXX ±
METRIC SEE TABLE
ANGLES :
MATERIAL
COLOR
DO NOT SCALE DRAWING

THIS DRAWING/SPECIFICATION) IS THE PROPERTY OF ITE CORPORATION ALL RIGHTS RESERVED

APPROVALS	DATE
DRAWN	
CHECKED Grant	Sep-14-17
ISSUED	

SIZE A0 | DWG. NO. | REV.

SCALE 0.500 | SHEET 1 OF 1